Realistic Posture Prediction

K. Abdel-Malek[1] W. Yu[1] M. Jaber[2]

[1]Department of Mechanical Engineering and
Center for Computer Aided Design (CCAD)
The University of Iowa
Iowa City, IA 52242
Tel. (319) 335-5676
Fax. (319) 335-5669
amalek@engineering.uiowa.edu

[2]Schools of Aeronautical, Industrial, and Mechanical Engineering
Ryerson Polytechnic University
Toronto, ON M5B 2K3, Canada
Tel: (416) 979-5000 Ext. 7623
mjaber@acs.ryerson.ca

Abstract

This paper presents an efficient numerical formulation for the prediction of realistic postures. This problem is defined by the method (or procedure) used to predict the posture of a human, given a point in the reachable space. The exposition addresses (1) the determination whether a point is reachable (i.e., does is it exist within the reach envelope) and (2) the calculation of a posture for a given point and a given orientation. While many researchers have used either statistical models of empirical data or inverse kinematics for posture prediction, we present a method based on kinematics for modeling, but one that uses optimization of a cost function to predict a realistic posture. We illustrate the methodology and accompanying experimental code through a planar and a spatial example.

Keywords: posture prediction, inverse kinematics, ergonomics, human modeling

Introduction

Human modeling and simulation has been extensively used in recent years (with the appearance of commercial codes) to study the functionality of humans in their work environment with the aim to design for ergonomics. Posture prediction is an important aspect of digital human simulation. To explain the meaning of posture prediction, consider a given a point in space (e.g., a target), it is required to determine the joint angles that configure the arm (and torso if need be) that allow a specified point on the index finger to touch the target point. Similarly, if a box is located in a given position and orientation, what is the configuration of the torso, shoulder joint, and arm that would be assumed by a person to lift this box. Therefore, posture prediction represents algorithms that enable the estimation of human joint angles for a given posture. In applying these methods to any particular design problem, the primary attempt is to establish the boundary conditions of the workplace, and predict realistic postures and feasible arm reaches. A proactive, rather than reactive, approach allows designers to incorporate reachable features into designs that minimize the risk of injury before a person ever physically encounters the product or workplace (Feyen et al. 2000). We believe that digital human simulation is an effective method for ergonomic design.

There has been two schools of thought regarding posture prediction. The first, perhaps the more traditional, uses anthropometrical data, collected from performing thousands of experiments by human subjects, or simulation using three-dimensional computer-aided man-modeling software [see for instance; Porter et al. (1990) and Das and Singupta (1995)], which were statistically analyzed to form a predictive model of posture; e.g.

regression models. This school of thought is referred to as empirical-statistical modeling. These models have been implemented in various simulation software systems with some variations as to the method for selecting the most probable posture. Among the empirical-statistical modelers were Beck and Chaffin (1992), Zhang and Chaffin (1996,1997), Das and Behara (1998), and Faraway, et al. (1999). Early work that raised concern regarding the use of anthropometrical data was reported by Bonney et al. (1980), where they indicated that very few surveys take sufficient measurements to define an accurate 3D human models. They suggested that ergonomists should take more comprehensive measurements to maximize the potential application of their data. The second school of thought often used biomechanics as a predictive tool, on a posture that has not been observed but has been estimated as a likely posture for a task (Tracy, 1990). This school mathematically modeled the motion of a limb with the goal of formulating a set of equations that can be solved for the joint variable. In the field of kinematics, this problem is called inverse kinematics. Among the researchers who belong to this school of modeling are Kee et al. (1994), Jung et al. (1995a), Jung and Kee (1996), Jung and Choe(1996), Kee and Kim (1997), and Wang (1999).

While some researchers that belong to one school of modeling (in particular Beck and Chaffin 1992) cautioned that the inverse kinematics algorithm is not necessarily correct for prediction of posture because of its theoretical foundation others (Faraway, et al. 1999) have also argued that postures that are modeled using angles between body segments, rather than joint coordinates, may violate task constraints. On the other hand, those that belong to the inverse kinematics school of modeling, state that most existing

human models have not fully utilized anthropometric data due to the generalized formalism of data manipulation, which may result in serious problems when a system is upgraded or when a specific population of operators is considered (e.g., see the object-oriented anthropometric work by Jung and Kang 1995 and Jung, et al. 1995). The concept of cost function for posture prediction is not new. Based on an earlier study (Jung, et al. 1992), Jung, et al. (1994) proposed the concept of using a psychophysical cost function to define a cost value for each joint movement angle and, subsequently, solve the redundancy problem in human movement. In developing the psychophysical cost function they integrated the psychophysical discomfort of joints and the joint range availability concept; a concept that has been used to predict the arm reach posture for redundant arm manipulation in robotics. Jung, et al. (1994) results showed that the postures predicted by the psychophysical cost function closely simulated human postures and the predictability was more accurate than that by the biomechanical cost function.

Jung et al. (1995a) also states that most existing reach posture prediction models have used heuristic methods, which provide only the range of feasible postures, not always ensuring the actual posture that a person naturally takes. As a result, an approximate analytical reach prediction algorithm, was developed (Jung et al. 1995a) where the Devait and Hartenberg (D-H) notation was used to represent human motion., Subsequently, Jung and Kee (1996) and Jung and Choe (1996) developed a regression model to predict the perceived discomfort with respect to the joint movement. Their reportedly demonstrated that humans adopt postures of minimum discomfort among all feasible body configurations. Similar results were reported by Dysart and Woldstad (1996) who used

three separate models and objective functions to predict the postures of humans performing static sagittal lifting tasks. The models used a common inverse kinematics characterization to represent mathematically feasible postures, but explore different criteria functions for selecting a final posture. Dysart and Woldstad (1996) results showed that the first objective function (minimum total torque) was more accurate.

Also using the concept of inverse kinematics, Kee and Kim (1997) proposed an approximate algorithm to generate the workspace including foot and trunk motion. More recent results have focused on a combination of methods such as both rule-based empirical and optimization to address the posture prediction problem (Wang 1999). Indded, Wang showed that the inverse kinematics problem is ill-posed because of the redundancy of the human arm. Wang's algorithm, as compared to the generalized inverse kinematics algorithm, can handle the non-linearity of joint limits with no need for inverse matrix calculation. Thus, avoiding the stability and convergence problems, which often occur near a singularity of the Jacobian. Other researchers adopted different approaches to predict posture than those aforementioned. The emergence of Artificial Neural Networks models to provide more accurate predictions over the standard statistical models (Eksioglu, et al. 1996; Jung and Park 1994; Hestenes 1994).

Problem Definition

In this paper, we explore the use of recent computational schemes and genetics algorithm to introduce a third approach to posture prediction. Before proceeding, we define the problems that will be addressed. (1) Given a target point in space, is this point reachable?

(2) Given a target point in space, what are the joint angles that would configure the limb such that a particular point on the limb will reach the target point, (3) Given a target point in space and given an orientation at the target point (e.g., orientation of the index finger), it is required to estimate the posture of the limb that would yield this position and orientation of the end-effector, and (4) Given a target point and a complete description of the orientation of the end-effector (i.e., three vectors are also given), it is required to estimate the posture of the limb that would yield this position and orientation of the end-effector. The problem is illustrated in Fig. 1 where an initial posture is shown in Fig. 1(a). A point is specified and Posture I (Fig. 1b) is calculated in order to reach the point. However, because of the redundancy in the upper extremity, there are an infinite number of postures that can be made to reach the point. Another less realistic posture is shown in Fig. 1c.

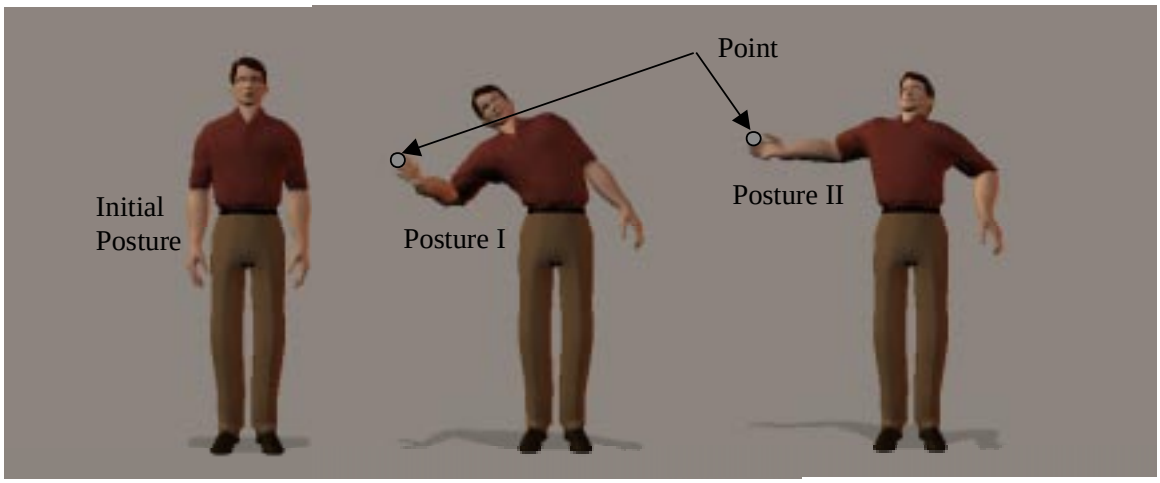

(a) Initial posture (b) A calculated realistic posture (c) A less realistic calculated posture
Fig. 1 Predicting a human posture

In this paper, we present solutions to the above four problems. The answer to the first question will be explored using our recent results in the closed form determination of the workspace envelope (presented in an accompanying paper). The remaining three

questions will be addressed using a novel cost function optimization analysis and solved using genetics algorithms (GA).

We will first present the background material necessary for the analysis. We then present an efficient method for answering whether a given point is reachable in the workspace. Cost functions are then derived that will be used to predict realistic (sometimes called naturalistic) postures. Before proceeding, it is important to note that although our exposition will be focused on the arm, the implementation of this mathematical formulation is valid for any part of the human body. For example, one may elect to model the arm and the torso as an open kinematic chain.

Modeling and Ranges of Motion

Introduce the modeling method here. Put a nice picture as well of the arm and two links. The D-H representation provides a systematic method for describing the relationship between adjacent links. The 4×4 transformation matrix describing a transformation from link (*i*-1) to link *i* for a revolute joint is

$$ {}^{i-1}\mathbf{T}_i = \begin{bmatrix} \cos q_i & -\cos\alpha_i \sin q_i & \sin\alpha_i \sin q_i & a_i \cos q_i \\ \sin q_i & \cos\alpha_i \cos q_i & -\sin\alpha_i \cos q_i & a_1 \sin q_i \\ 0 & \sin\alpha_i & \cos\alpha_i & d_i \\ 0 & 0 & 0 & 1 \end{bmatrix} \tag{1} $$

where θ_i, depicted in Fig. 1, is the joint angle from $\mathbf{x}_{i-1}$ to the $\mathbf{x}_i$ axis, d_i is the distance from the origin of the (i-1)th coordinate frame to the intersection of the $\mathbf{z}_{i-1}$ axis with the $\mathbf{x}_i$, a_i is the offset distance from the intersection of the $\mathbf{z}_{i-1}$ axis with the $\mathbf{x}_i$ axis, and α_i is the offset angle from the $\mathbf{z}_{i-1}$ axis to the $\mathbf{z}_i$ axis. The position vector of a point of

interest on the end-effector of a human articulated model (e.g., a point on the thumb with respect to the shoulder) can be written in terms of joint coordinates as

$$\mathbf{x} = \mathbf{\Phi}(\mathbf{q}) \tag{2}$$

where $\mathbf{q} \in \mathbf{R}^n$ is the vector of *n*-generalized coordinates, and $\mathbf{\Phi}(\mathbf{q})$ can be obtained from the multiplication of the homogeneous transformation matrices defined by the D-H representation method **(**Denavit and Hartenberg 1955**)** as

$$^0\mathbf{T}_n = {}^0\mathbf{T}_1\,{}^1\mathbf{T}_2 \ldots {}^{n-1}\mathbf{T}_n = \begin{bmatrix} {}^0\mathbf{R}_n(\mathbf{q}) & \mathbf{\Phi}(\mathbf{q}) \\ \mathbf{0} & 1 \end{bmatrix} \tag{3}$$

where ${}^i\mathbf{R}_j$ is the rotation matrix and ${}^i\mathbf{T}_j$ is the homogeneous transformation matrix relating bodies *i* to *j*.

In order to extend the formulation to include ranges of motion in the form of inequality constraints such as $q_i^{\min} \le q_i \le q_i^{\max}$ (e.g., the range of motion of the elbow is approximately $0^o \le q \le 150^o$), a transformation is introduced as

$$q_i = a_i + b_i \sin \lambda_i \tag{4}$$

where $a_i = \left(q_i^{\max} + q_i^{\min}\right)/2$ and $b_i = \left(q_i^{\max} - q_i^{\min}\right)/2$ are the mid point and half range of the inequality constraint and λ is a slack variable (i.e., we have converted the inequaliy to an equality). The position constraint function is then written in terms of the extended vector $\boldsymbol{\lambda} = \left[\lambda_1\ \lambda_2\ \ldots \lambda_n\right]^T$ such that

$$\mathbf{x} = \mathbf{\Phi}^*(\boldsymbol{\lambda}) = \left[\mathbf{\Phi}(\mathbf{q}(\boldsymbol{\lambda}))\right] \tag{5}$$

To study the boundary of this function, we use the implicit function theorem to determine the reach envelope (Abdel-Malek, et al. 1997; 1999; 2000 and Abdel-Malek and Yeh 2000). Indeed, if we differentiate Eq. (4) with respect to time to obtain the velocity, the right hand side will comprise two matrices and the joint veloicty vector as

$$\dot{\mathbf{x}} = \mathbf{\Phi_q q}_\lambda \dot{\boldsymbol{\lambda}} \tag{6}$$

where $\mathbf{q}_\lambda = \partial q_i / \partial \lambda_j$ is a diagonal matrix, $\dot{\boldsymbol{\lambda}} = d\boldsymbol{\lambda}/dt$ is the vector of joint velocities, and $\mathbf{\Phi_q}$ is the Jacobian defined by

$$\mathbf{\Phi_q} = \left[\partial \mathbf{\Phi}_i(\mathbf{q}) / \partial q_j \right] \tag{7}$$

Using the Implicit Function Theorem, we were able to delineate singular surfaces that are on the boundary of the reachable workspace, i.e., the reach envelope. This is accomplished by studying the rank deficiency of the Jacobian. Define the subvector of $\mathbf{q}$ as a set of constant generalized coordinates $\mathbf{p}_i \in \mathbf{R}^m$ where $m \le n-1$, and $\mathbf{q} = \mathbf{u} \cap \mathbf{p}_i$. Singular sets p_i of the manipulator can be obtained from studying the dimension of the null space of $\mathbf{\Phi}_\mathbf{q}^T(\mathbf{q})$, defined by Abdel-Malek and Yeh **(1997)** as the set

$$\mathbf{S} = \left\{ \mathbf{p}_i \in \mathbf{R}^m ; \dim\left[Null(\mathbf{\Phi}_\mathbf{q}^T(\mathbf{q})) \right] \ge 1, \mathbf{q} = \left[\mathbf{u} \quad \mathbf{p}_i \right] \text{ for some constant } \mathbf{p}_i \right\} \tag{8}$$

where $\mathbf{u} \in \mathbf{R}^{n-m}$ is the vector of generalized coordinates that are not in $\mathbf{p}_i$. On a singular surface, the term $\mathbf{\Phi_q q}_\lambda \big|_{\mathbf{q}_o, \boldsymbol{\lambda}_o}$ is rank-deficient. Therefore, a boundary is identified when the rows of $\mathbf{\Phi_q q_s}$ are dependent. As a result, the sets of singular values $\mathbf{p}_i$ are identified and substituted into$\mathbf{\Phi}(\mathbf{q})$ to yield singular surfaces on the boundary of the reach envelope, which we will denote by $\mathbf{\Psi}(\mathbf{u})$.

Is a point reachable?

This problem is of significant importance in human motion simulation because it is extensively used in the design of ergonomic workspaces and layouts. For example, the user of a human modeling and simulation code may inquire whether a given point can be touched by a digital person! Commercial systems address this question by first generating all possible curves by driving the joints of the limb in question through all possible ranges. The result is a combination of curves that are then overlaid with a mesh. The point is then visually checked whether it is enclosed by this fictitious surface.

This question is readily and *exactly* answered using our formulation by mathematically studying the existence of a point inside the reach envelope. Because the above formulation yields a complete exact representation of the boundary to the reach envelope in closed form, it is possible to mathematically determine whether a given point (e.g., a button), curve (i.e., a trajectory), or an object (e.g., a lever) are inside the reach envelope.

The parametric surface patches on the boundary of the reach envelope are described by a number of $\mathbf{\Psi}(\mathbf{u})$ as illustrated in Fig. 2. A point is reachable if it exists inside the reach envelope. Therefore, it is now necessary to establish whether a point is inside the reach envelope.

For a number of surface patches, a point (e.g., point **p** in Fig. 2) is inside the envelope if the ray cast from that point intersects an odd number of times with the surface patches. If intersects an even number of times, it is outside (i.e., not reachable).

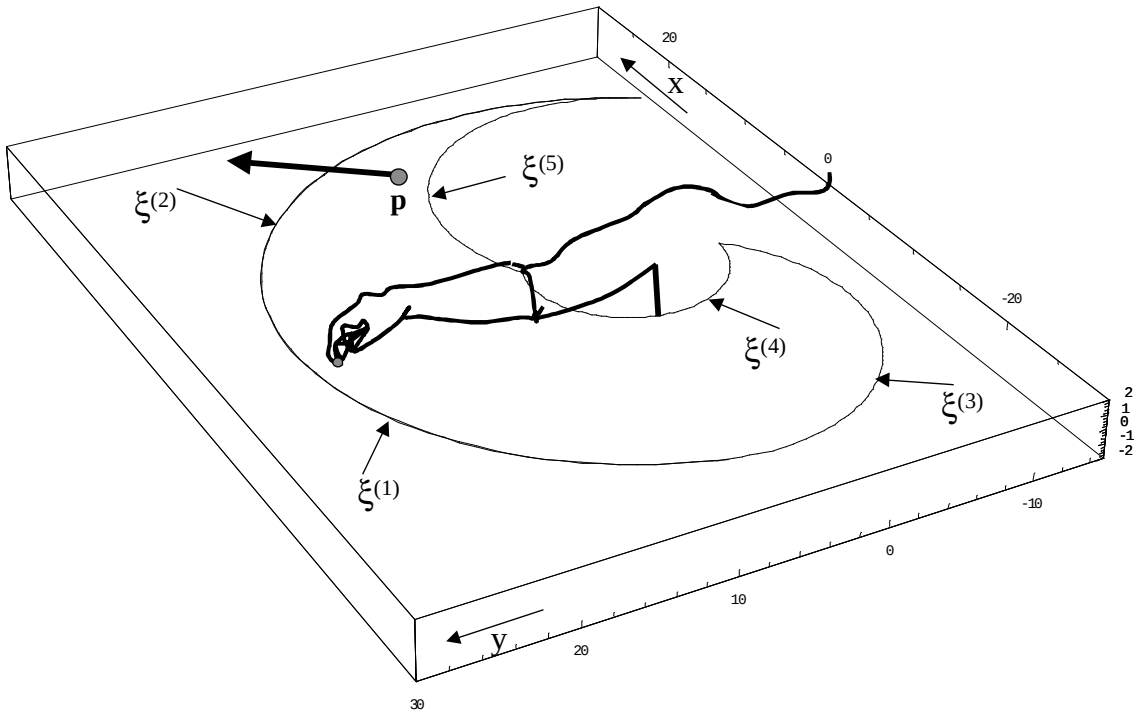

Fig. 2 Determining whether a point is reachable

Cost Functions

If after determining whether a point is reachable, the user requires a prediction of a posture at that point, the analysis becomes more difficult due to the nature of the redundancy inherent in the human body.

It is evident that the motion subtended by the human arm to reach a specific target is directly dependent upon the arm's initial posture (i.e., initial conditions). A person will usually reach towards a target using the least motion of the joints possible. A person will also usually avoid exerting unnecessary energy against gravity (i.e., humans do not like to maintain their arms up in the air). Therefore, we propose driving functions on the motion characterized by minimizing the displacement from the initial posture and minimizing the potential energy exerted towards reaching the target, subject to the kinematic constraints

discussed above and each joint's range of motion. Such cost functions can be developed for dexterity, stress, potential and kinetic energy, and force.

As we have explained in the Introduction, in order to determine the inverse kinematics of a redundant kinematic chain, it will be necessary to select the most suitable solution from a family of solutions. The choice of solutions must be made subject to a naturalistic motion (and to a certain extent) based on the motor control ability to choose a correct posture. We therefore propose the use of cost functions to drive the arm's posture from its initial position to one that is most likely to be adopted by a person. It must be noted that these cost functions will be used to drive the arm and not to optimize for the best solution.

Consider a cost function that measures the level of discomfort from the most neutral position of a given joint. Let q_i^N be the neutral position of a joint. Then the displacement from the neutral position is given by $q_i - q_i^N$. Because the discomfort is usually felt higher in some joints versus others, we also introduce a weight function w_i to stress the importance of one joint versus another. The total discomfort of all joints is then characterized by the function

$$f_d = \sum_{i=1}^{n} w_i \left| q_i - q_i^N \right| \tag{9}$$

where w_i is a weight function assigned to each joint for the purpose of giving importance to joints that are usually more affected than others.

For a second cost function, consider the potential energy exerted by a limb. Each link (e.g., the forearm) has a specified center of mass. The vector from the origin of the link's coordinate system to the center of mass is given by ${}^{i}\mathbf{r}_i$, where similar superscript and subscript indicate that the vector is resolved in the link's coordinate system as illustrated in Fig. 3.

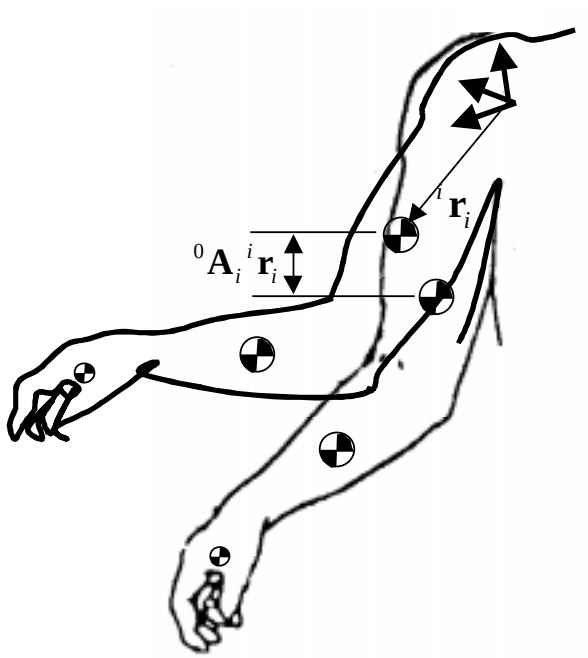

Fig. 3 Illustrating the potential energy of the forearm

The total potential energy f_P is the sum of all individual potential energies P_i. For a gravity vector given by $\mathbf{g} = \begin{bmatrix} 0 & 0 & -g \end{bmatrix}^T$, the total potential energy of the arm is given by

$$f_P = \sum_{i=1}^{n} P_i = \sum_{i=1}^{n} \left(-m_i \mathbf{g} ({}^{0}\mathbf{A}_i\,{}^{i}\mathbf{r}_i) \right) \tag{10}$$

We define a cost function that is based on maximizing the dexterity at target points. Indeed, to mathematically formulate this problem, it is necessary to use a dexterity measure at specific target points and that is a function of the design variables $\mathbf{w}$. Such a measure must account for the ranges of motion for each joint. Because of the need for an

analytical expression that can be used in the proposed optimization method, we define a new dexterity measure.

Because human joints are constrained, we must characterize each joint limit by an inequality constraint in the form of $q_i^L \le q_i \le q_i^U$. In order to include ranges of motion in the formulation, we have used a parameterization (see Appendix A) to convert inequalities on q_i to equalities $q_i = \Psi(\lambda_i)$, where the new variables are defined by $\boldsymbol{\lambda} = \left[\lambda_1, \lambda_2, \ldots, \lambda_n\right]^T \in \mathbf{R}^n$. For any admissible configuration (i.e., for the hand at a specific position that can be reached), the following $(n+3)$ augmented constraint equations must be satisfied

$$\mathbf{G}(\mathbf{q}^*) = \begin{bmatrix} \mathbf{P}_0^n(\mathbf{q}) - \mathbf{x} \\ \boldsymbol{\Psi}(\boldsymbol{\lambda}) - \mathbf{q} \end{bmatrix}_{(n+3)\times 1} = \mathbf{0} \tag{11}$$

where the augmented vector of generalized coordinates is $\mathbf{q}^* = [\mathbf{x}^T \quad \mathbf{q}^T \quad \boldsymbol{\lambda}^T]^T$. By defining a new vector $\mathbf{z} = [\mathbf{q}^T \quad \boldsymbol{\lambda}^T]^T$ (input parameters), the augmented coordinates can be partitioned as

$$\mathbf{q}^* = \left[\mathbf{x}^T \quad \mathbf{z}^T\right]^T \tag{12}$$

The set defined by $\mathbf{G}(\mathbf{q}^*)$ is the totality of points in the reach envelope that can be touched by the hand. The so-called extended Jacobian of $\mathbf{G}(\mathbf{q}^*)$ is obtained by differentiating $\mathbf{G}$ with respect to $\mathbf{z}$ as

$$\mathbf{G}_{\mathbf{z}} = \begin{bmatrix} \mathbf{P}_{\mathbf{q}} & \mathbf{0} \\ \mathbf{I} & \boldsymbol{\Psi}_{\boldsymbol{\lambda}} \end{bmatrix} \tag{13}$$

which is an $(n+3)\times(2n)$ matrix, where $\mathbf{P_q} = \partial P_i / \partial q_j$ is a $(3\times n)$ matrix, $\mathbf{I}$ is the $(n\times n)$ identify matrix, and $\mathbf{\Psi_\lambda} = \partial \Psi_i / \partial \lambda_j$ is an $(n\times n)$ diagonal matrix with diagonal elements as $\Psi_\lambda)_{ii} = b_i \cos\lambda_i$. We define $\mathbf{G_z}$ as the augmented Jacobian matrix. Note that the Jacobian was obtained from differentiating the position vector $\mathbf{P}$ as follows:

$$\dot{\mathbf{x}} = \left[\partial \mathbf{P} / \partial \mathbf{q}\right]\dot{\mathbf{q}} \tag{14}$$

where $\dot{\mathbf{x}}$ represents the absolute velocity of the hand and $\dot{\mathbf{q}}$ represents the vector of joint velocities. Therefore, the Jacobian $\mathbf{P_q} = \left[\partial \mathbf{P} / \partial \mathbf{q}\right]$ relates both velocities.

Since the extended Jacobian $\mathbf{G_z}$ inherently combines information about the position, orientation, and ranges of motion of the hand, it is a viable measure of dexterity. Furthermore, because of the simplicity in determining an analytical expression of $\mathbf{G_z}$, it is well-suited as a cost function for an optimization problem. We define the dexterity measure as

$$f_x = \sqrt{\left|\mathbf{G_z}\mathbf{G_z}^T\right|} \tag{15}$$

Note that the measure characterized by Eq. () takes into consideration all ranges of motion and singular orientations for a given arm, limb, or any serial chain.

We shall use these cost functions to drive the arm towards the target. However, an arm considering only the glenohumeral joint has seven DOF. If we consider the coraco clavicular joint then it can be modeled with at least 9 DOF, where we have taken into account only two translational directions of the motion of the shoulder. With this many

degrees of freedom, it is very difficult to implement a closed form inverse kinematics algorithm in an effective manner. We address this issue in the following section.

Formulation for Posture Prediction and Constraints

The problem is defined as follows:

(a) Given: The coordinates of a point in space (e.g., the point **p**) and the dimensions of a kinematic chain are specified and used as input. This is indeed the DH data characterizing the definition of each link in the chain and the location of joints, and their type. This chain could be any series of links (e.g., arm, torso, etc.).

(b) Cost function and Constraints

Cost functions can be selected and weighted from among a number of functions:

Discomfort from neutral position: $f_d = \sum_{i=1}^{n} w_i \left| q_i - q_i^N \right|$

Potential energy: $f_P = \sum_{i=1}^{n} P_i = \sum_{i=1}^{n} \left(-m_i \mathbf{g} ({}^0\mathbf{A}_i \, {}^i\mathbf{r}_i) \right)$

Dexterity: $f_x = \sqrt{\left| \mathbf{G_z} \mathbf{G_z}^T \right|}$

Joint ranges of motion are also imposed on this motion to achieve a given posture in the form of inequality constraints as $q_i^L \le q_i \le q_i^U$.

(c) Required

It is required to calculate a set of variables **q** that would allow the given posture while optimizing (maximizing/minimizing) the given cost functions and subject to the specified constraints.

(d) Why Genetics Algorithms?

A genetic algorithm is a search/optimization technique based on natural selection (Goldberg 1989). Successive generations evolve more fit individuals based on Darwinian survival of the fittest. The genetic algorithm is a computer simulation of such evolution where the user provides the environment (function) in which the population must evolve. An adaptation of such algorithm to the problem described herein is shown in Fig. 4.

(1) Genetics algorithms yield the global minimum versus only a local solution.

(2) Genetics algorithms are usually used when the search space is very large.

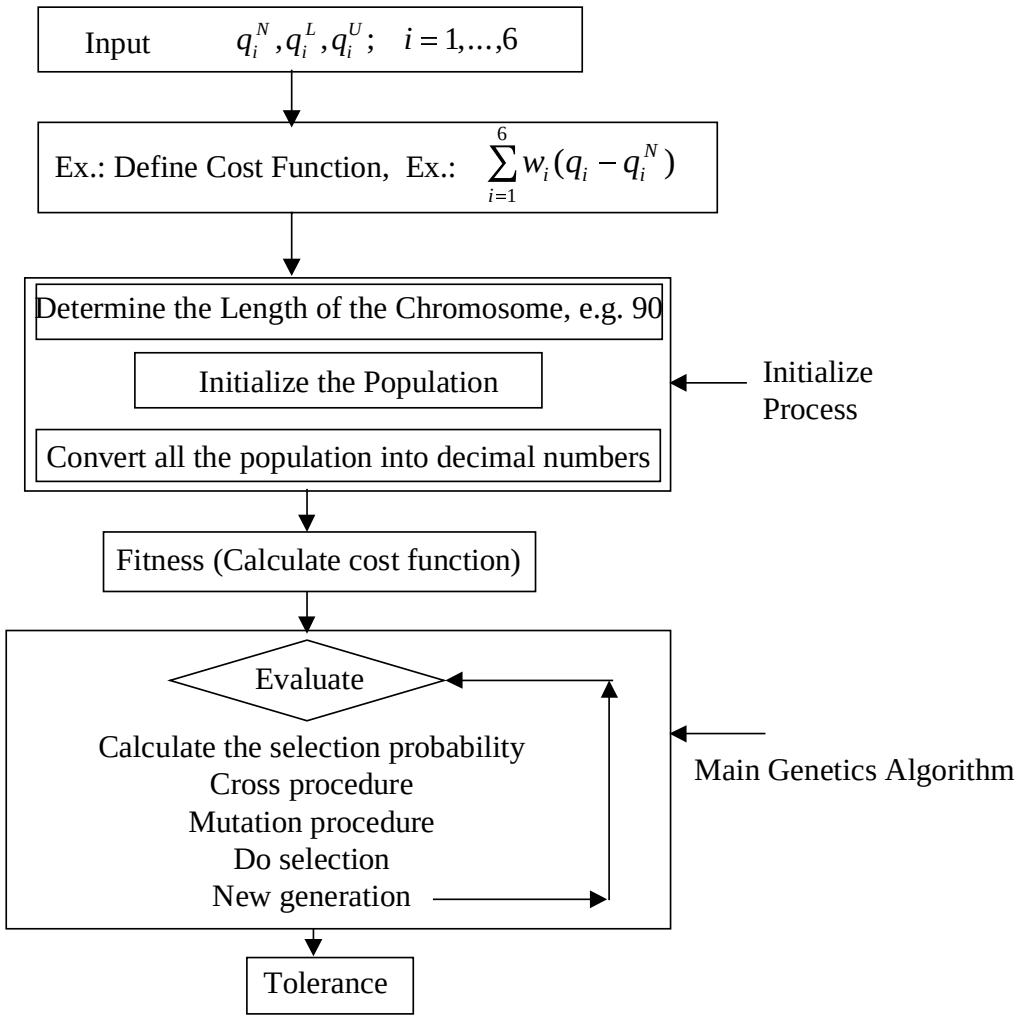

Fig. 4 Algorithm for predicting a posture using genetics algorithms

Illustrative Example (Arm restricted to planar motion)

Consider, for example, the simplified planar 3DOF arm shown in Fig. 5. This is an illustrative example to demonstrate our formulation where we have restricted the arm to planar motion.

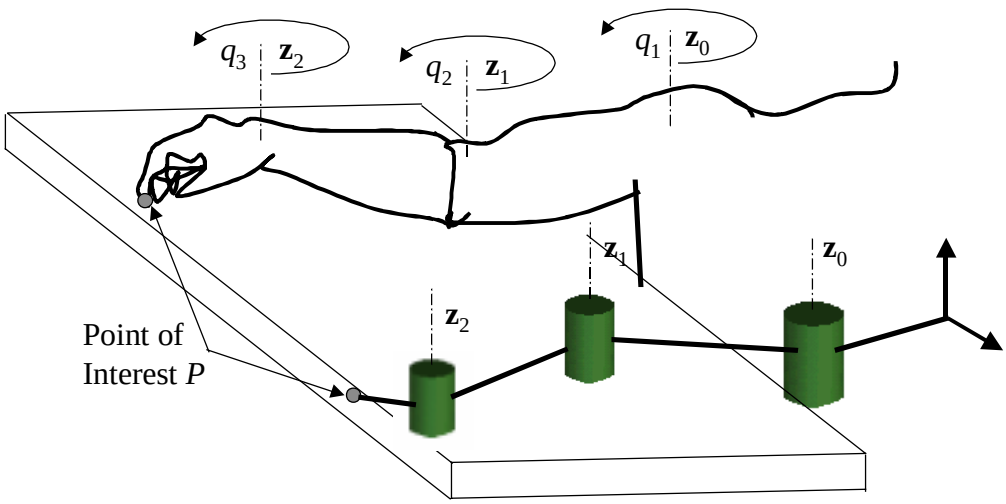

Fig. 5 The upper extremity modeled as 3DOF and restricted to planar motion

The objective of this exercise is two fold:

1. Given the point **p** =[5.67 3.59], and the following joint ranges of motion $-\pi/3 \le q_i \le \pi/3$; $i = 1,2,3$, it is required to determine whether this point is reachable.

2. If this point is reachable and it is required to reach the point with the following orientation **a**=[1 0], it is necessary to calculate a posture of the upper extremity.

The DH table is readily determined and presented in Table 1.

Table 1: DH Table

	θ_i	d_i	α_i	a_i
1	q_1	0	0	4
2	q_2	0	0	2
3	q_3	0	0	1

Substituting each row into Eq. (1) yields the following (4×4) transformation matrices

$$ {}^{0}\mathbf{T}_1 = \begin{bmatrix} \cos q_1 & -\sin q_1 & 0 & 4\cos q_1 \\ \sin q_1 & \cos q_1 & 0 & 4\sin q_1 \\ 0 & 0 & 1 & 0 \\ 0 & 0 & 0 & 1 \end{bmatrix}, {}^{1}\mathbf{T}_2 = \begin{bmatrix} \cos q_2 & -\sin q_2 & 0 & 2\cos q_1 \\ \sin q_2 & \cos q_2 & 0 & 2\sin q_1 \\ 0 & 0 & 1 & 0 \\ 0 & 0 & 0 & 1 \end{bmatrix}, $$

$$ {}^{2}\mathbf{T}_3 = \begin{bmatrix} \cos q_3 & -\sin q_3 & 0 & \cos q_3 \\ \sin q_3 & \cos q_3 & 0 & \sin q_3 \\ 0 & 0 & 1 & 0 \\ 0 & 0 & 0 & 1 \end{bmatrix} $$

Performing the multiplication and obtaining the position vector yields

$$ \mathbf{X}_0^n(\mathbf{q}) = \begin{bmatrix} 4\cos q_1 + 2\cos(q_1+q_2) + \cos(q_1+q_2+q_3) \\ 4\sin q_1 + 2\sin(q_1+q_2) + \sin(q_1+q_2+q_3) \end{bmatrix} \tag{16} $$

We shall also impose ranges of motion on each joint as $-\pi/3 \le q_i \le \pi/3$; $i = 1,2,3$.

Results of the reach envelope determination yield the following boundary curves (note that curves are generated because we have restricted the arm to planar movement. The boundary curves are defined by the following sets:

$\mathbf{x}(\pi/3, q_2, 0);\ q_2 \in [-\pi/3, 0]$,
$\mathbf{x}(q_1, 0, 0);\ q_2 \in [-\pi/3, \pi/3]$
$\mathbf{x}(\pi/3, \pi/3, q_3);\ q_3 \in [0, \pi/3]$
$\mathbf{x}(\pi/3, q_2, 0);\ q_2 \in [0, \pi/3]$,
$\mathbf{x}(-\pi/3, -\pi/3, q_3);\ q_3 \in [-\pi/3, 0]$
$\mathbf{x}(q_1, -\pi/3, -\pi/3);\ q_1 \in [-\pi/3, \pi/3]$

and $\mathbf{x}(q_1, \pi/3, \pi/3); q_1 \in [0, \pi/3]$.

Substituting the singular sets into Eq. (16) yields equations of curves shown in Fig. 6, which is the reach envelope.

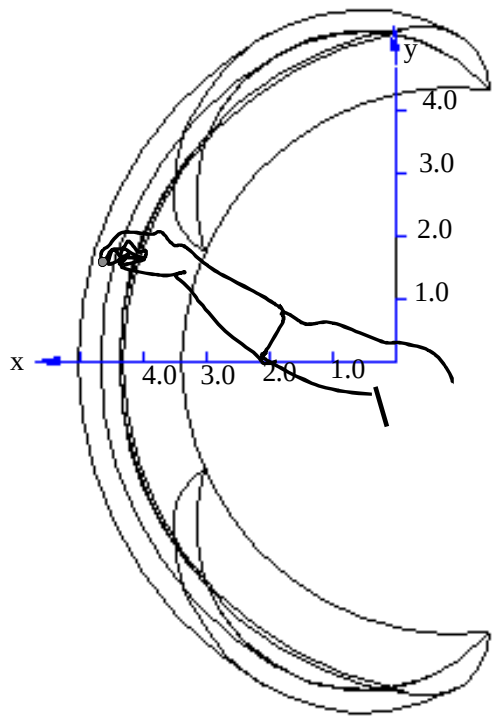

Fig. 6 The reach envelope of the upper extremity restricted to planar motion

We now answer the two objectives:

(a) To determine whether a point is reachable, we study the existence of the point inside the boundary to the reach envelope. This is a simple problem with many well-established algorithms. In this case, the point is within the boundary.

To predict a posture at this position **p** with the given orientation, we implement the minimum effort cost function given by:

$$F_{effort} = \sum_{i=1}^{n} (q_i^{final} - q_i^{initial})^2 \tag{17}$$

The computed joint angles for the final posture are

$\mathbf{q} = \begin{bmatrix} 0.78 \times \pi / 180 & -0.39 \times \pi / 180 & -0.39 \times \pi / 180 \end{bmatrix}^T$. The posture is schematically represented in Fig. 7.

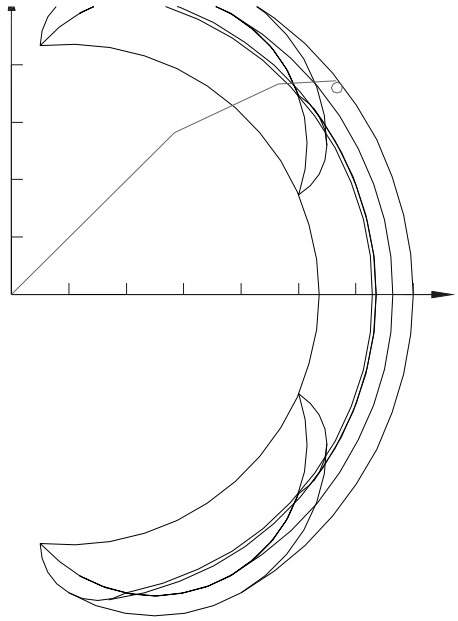

Fig. 7 The computed posture

A 9-DOF arm with two coupled joints

Consider now a much more realistic model of the shoulder, elbow, and wrist characterized by 9 DOFs and shown in Fig. 8. We have modeled the shoulder by five DOFs (two of which are translational that characterize the coraco clavicular joint), the elbow by a 1DOF rotational joint, and the wrist by 3DOF. In reality, muscles typically extend over more than one joint, therefore some of the joints are coupled. This effect is especially pronounced in the shoulder between the rotational and translational motion. To model this behavior, we propose a relation that couples the translational joints to the

revolute joints. This coupling is observed when one rotates the shoulder, which will also result in involuntary translational motion. The problem is now reduced to a 7DOF system, where the motion of the first and second joints are modeled as a combination of the summation of the third and fourth joints as

$$q_1 = 0.06(q_3 + q_4) \tag{18}$$

$$q_2 = 0.05(q_3 + q_4) \tag{19}$$

Two objectives are to be accomplished (a) Determine whether a point is reachable and (b) If it is reachable, calculate a posture. The ranges of motion for this arm are given as follows: $-1.5'' \le q_1 \le 1.5''$; $-1.5'' \le q_2 \le 1.5''$; $-\pi/2 \le q_3 \le \pi/2$; $-11\pi/8 \le q_4 \le 2\pi/3$; $-\pi/2 \le q_5 \le \pi/2$; $0 \le q_6 \le 5\pi/6$; $-\pi/3 \le q_7 \le \pi/3$; $-\pi/9 \le q_8 \le \pi/9$; and $-\pi \le q_9 \le 0$.

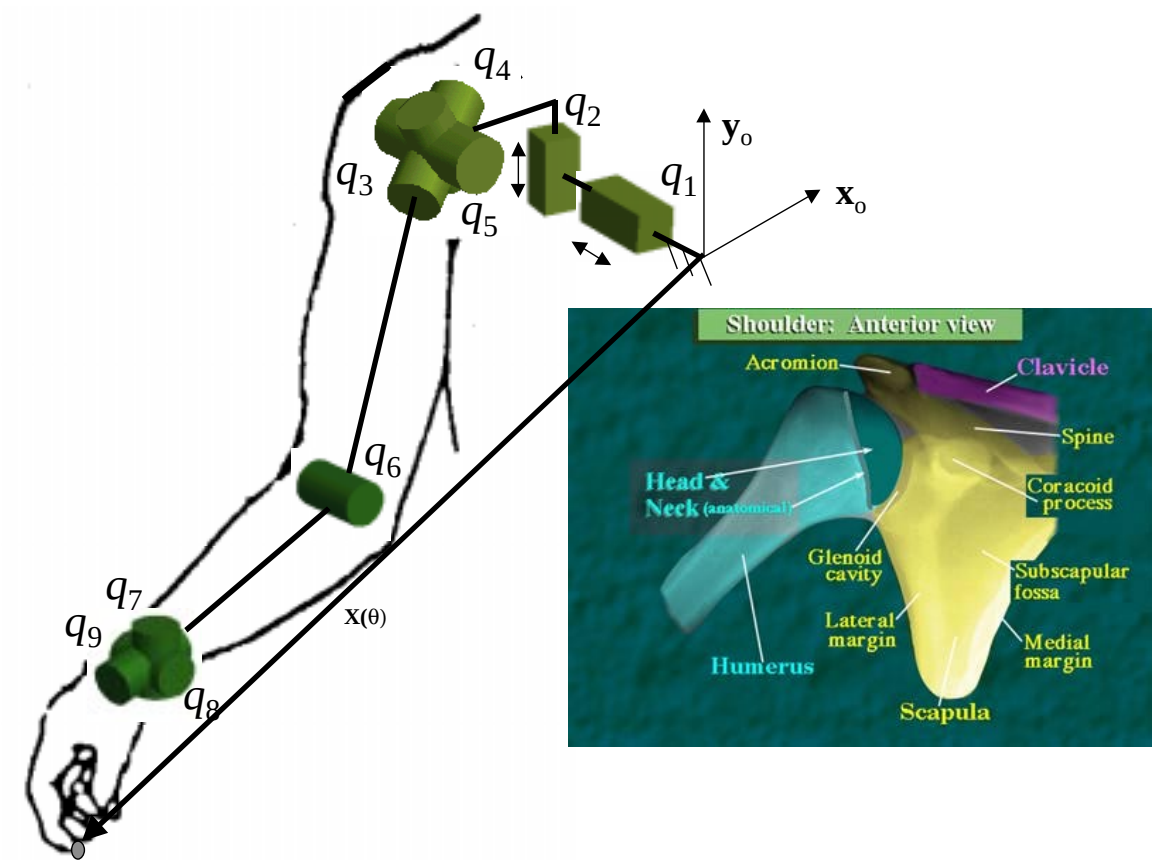

Fig. 8 Model of the upper extremity

The 9 DOF reach envelope is then calculated where surface patches on the boundary are determined in closed form and shown in Fig. 9.

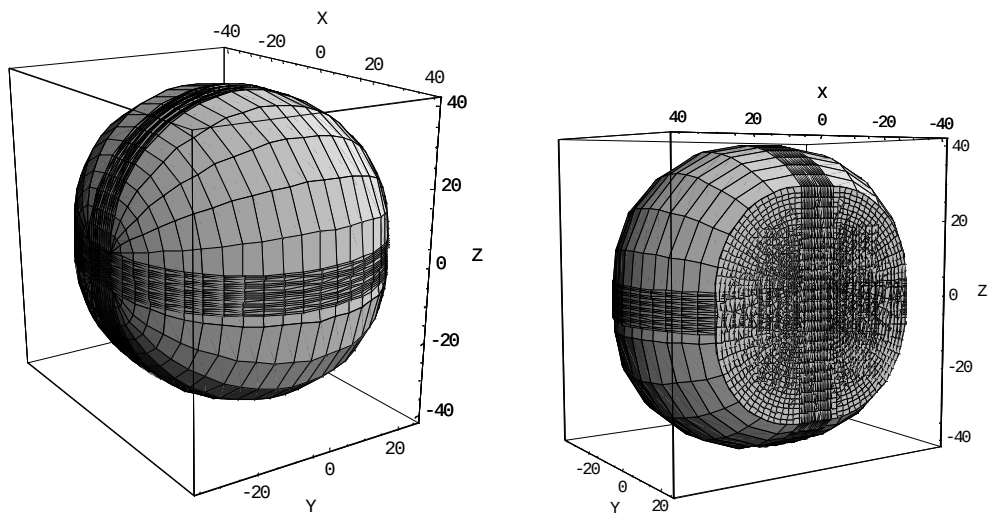

Fig. 9 Reach envelope of the upper extremity

The point in question has coordinates $\mathbf{p} = \begin{bmatrix} -1.82 & 8.50 & -21.83 \end{bmatrix}^T$ and a required orientation defined by $\mathbf{a} = \begin{bmatrix} -.582 & -0.228 & -0.78 \end{bmatrix}^T$. Based on a minimum effort cost function, the posture of the arm is calculated as

$q_3 = .71 \times 180/\pi$, $q_4 = 0.84 \times 180/\pi$, $q_5 = -0.65 \times 180/\pi$, $q_6 = -0.78 \times 180/\pi$,

$q_7 = 0.12 \times 180/\pi$, $q_8 = 0.79 \times 180/\pi$, and $q_9 = 0.32 \times 180/\pi$.

Now consider the same model of the 9DOF arm but with a different driving function (cost function). The function used to predict a posture in this case is dexterity defined by a new measure for dexterity as follows:

Upon executing the algorithm, the maximum dexterity function is calculated as

$D = \sqrt{\mathbf{G_q} \mathbf{G_q}^T} = 619692$ at the following posture

$q_3 = 1.5 \times \pi / 180$, $q_4 = 0.48 \times \pi / 180$, $q_5 = 0.06 \times \pi / 180$, $q_6 = 1.7 \times \pi / 180$,

$q_7 = .15 \times \pi / 180$, $q_8 = .19 \times \pi / 180$, and $q_8 = -.6 \times \pi / 180$.

Conclusions

A broadly applicable formulation and accompanying experimental code for predicting realistic postures as a result of human motion has been presented and illustrated. While many models are available especially in the robotics literature that predict posture (elsewhere known as inverse kinematics), we believe that realistic postures can only be obtained from (1) Empirical data and (2) Optimization through cost functions. The method presented in this paper has been shown to yield realistic posture because it is based on cost functions that characterize human performance measures and that are used as driving functions in an iterative numerical optimization algorithm.

The advantage of the method described herein over other existing methods can be seen by studying the posture of the arm given two initial configurations. For example, for a specific target point, if the arm was initially at the person's waist, then the calculated posture should be different than that calculated if the arm was initially at the person's head. This is evidently not true for the other two methods (inverse kinematics and statistically based methods). Moreover, we believe that the method presented herein is the basis for addressing issues pertaining to neural commands and the central nervous system, which is the subject of our current efforts. The long term vision for this research is to develop rigorous analysis tools to aid in the ergonomic design process.

References

Abdel-Malek, K., Yang, J., Brand, R., and Vannier, M., 2000, "Understanding the Workspace of Human Limbs", (submitted) *Journal of Applied Ergonomics*.

Abdel-Malek, K, Yeh, HJ, and Khairallah, N, 1999 "Workspace, Void, and Volume Determination of the General 5DOF Manipulator, *Mechanics of Structures and Machines*, Vol. 27, No. 1, pp. 91-117.

Abdel-Malek, K. and Yeh, H. J., (2000) "Local Dexterity Analysis for Open Kinematic Chains," *Mechanism and Machine Theory*, Vol. 35, pp. 131-154.

Abdel-Malek, K, Adkins, F, Yeh, HJ, and Haug, EJ, 1997, "On the Determination of Boundaries to Manipulator Workspaces," *Robotics and Computer-Integrated Manufacturing*, Vol. 13, No. 1, pp.63-72.

Beck, D.J.; Chaffin, D.B.; "Evaluation of Inverse Kinematic Models for Posture Prediction", *Proceedings of the International Conference on Computer Aided Ergonomics and Safety - CAES* '92 May 18-20, pp. 329.

Bonney, M. C., Case, K. and Porter, J.M., 1980. User needs in computerized man models In: R. Easterby, K.H.E Kroemer and D. B. Chaffin, *Anthropometry and Biomechanics: Theory and Application*, 97-101, Plenum Press, New York, USA.

Das, B; Behara, DN., 1998. Three-dimensional workspace for industrial workstations. *Human Factors*, 40(4),.633-646.

Das, B; Sengupta, A K., 1995. Computer-aided human modelling programs for workstation design. *Ergonomics*, 38, 1958-1972.

Denavit, J. and Hartenberg, R.S., [1955]. "A Kinematic Notation for Lower-Pair Mechanisms Based on Matrices", *Journal of Applied Mechanics*, vol.77, pp.215-221.

Dysart, M. J., and Woldstad, J. C., 1996. Posture prediction for static sagittal-plane lifting. *Journal of Biomechanics*, 29(10), 1393-1397.

Eksioglu, M, Fernandez, J.E., and Twomey, J.M., 1996. Predicting peak pinch strength: Artificial neural networks vs. regression. *International Journal of Industrial Ergonomics*, 18 (5-6), 431-441.

Faraway, J.J.; Zhang, X.; Chaffin, D.B., 1999. Rectifying postures reconstructed from joint angles to meet constraints. *Journal of Biomechanics*, 32(7), 639-754.

Feyen, R., Yili, L., Chaffin, D., Jimmerson, G., and Brad, J., 2000. Computer-aided ergonomics: a case study of incorporating ergonomics analyses into workplace design. *Applied Ergonomics*, 31(3), 227-334.

Goldberg, D., 1989, *Genetic Algorithms in Search, Optimization and Machine Learning*, Addison-Wesley.

Hestenes, D., 1994. Invariant body kinematics; reaching and neurogeometry . *Neural Networks*, 7(1), 79-88.

Jung, E. S., Choe, J., and Kim, S-H., 1994, Psychophysical cost function of joint movement for arm reach posture prediction. *Proceedings of the 38th Annual Meeting of the Human Factors and Ergonomics Society*, 1(1-2), 636-640.

Jung, E. S., and Kee, D., 1996. A man-machine interface model with improved visibility and reach functions. *Computers & Industrial Engineering*, 30 (3), 475-486.

Jung, E. S., and ; Park, S., 1994. Prediction of human reach posture using a neural network for ergonomic man models, *Computers & Industrial Engineering*, 27 (1-4), 369-372.

Jung, E. S., and Choe, J., 1996. Human reach posture prediction based on psychophysical discomfort. *International Journal of Industrial Ergonomics*, 18 (2-3), 173-179.

Jung, E. S., Kee, D. and Chung, M. K., 1995. Upper Body Reach Posture Prediction for Ergonomics Evaluation Models. *International Journal of Industrial Ergonomics*, 16 (2), 95-107.

Jung, E.S., and Kang, D., 1995. An object-oriented anthropometric database for developing a man model. *International Journal Of Industrial Ergonomics* ,15(2), 103-110

Jung, E.S.; Kee, D.; Chung, M.K., "Upper Body Reach Posture Prediction for Ergonomics Evaluation Models", *International Journal of Industrial Ergonomics*, v16 n2 1995, p 95.

Jung, E S.; Choe, J, 1996, "Human reach posture prediction based on psychophysical discomfort", *International Journal of Industrial Ergonomics*, v18 n2-3, pp. 173-179.

Jung, E S.; Choe, J, 1996, "Human reach posture prediction based on psychophysical discomfort", *International Journal of Industrial Ergonomics*, v18 n2-3, pp. 173-179.

Jung, E S.; Choe, J; Kim, SH., 1994, "Psychophysical cost function of joint movement for arm reach posture prediction" *Proceedings of the 38th Annual Meeting of the Human Factors and Ergonomics Society*, Part 1 (of 2) Oct 24-28 1994 v1, Nashville, TN, pp. 636-640.

Jung, E S.; Kee, D; Chung, M K., "Reach posture prediction of upper limb for ergonomic workspace evaluation", *Proceedings of the 36th Annual Meeting of the Human Factors Society*, Part 1 (of 2) Oct 12-16 1992 v 1, Atlanta, GA, pp. 702-706.

Jung, E S.; Park, S, "Prediction of human reach posture using a neural network for ergonomic man models", *Proceedings of the 16th Annual Conference on Computers and Industrial Engineering*, Mar 7-9 1994 v27 n1-4 Sep 1994 Ashikaga, Japan, pp. 369-372.

Kee, D., Jung, E. S., and Chang, S., 1994. A man-machine interface model for ergonomic design. *Computers & Industrial Engineering*, 27 (1-4), 365-368.

Kee, D., and Kim, S-H., 1997. Analytic generation of workspace using the robot kinematics. *Computers & Industrial Engineering*, 33(3,4), 525-528

Pheasant, S. T., 1990. Anthropometry and design of workspaces. In: J. R. Wilson and E. N. Corlett (Eds.), *Evaluation of Human Work*, 455-471, Taylor & Francis, London, UK.

Porter, J. M., Case, K., and Bonney, M. C., 1990. Computer workspace modelling. In: J. R. Wilson and E. N. Corlett (Eds.), *Evaluation of Human Work*, 472-499, Taylor & Francis, London, UK.

Tracy, M. F., 1990. Biomechanical methods in posture analysis. In: J. R. Wilson and E. N. Corlett (Eds.), *Evaluation of Human Work*, 571-604, Taylor & Francis, London, UK.

Wang, X, "Behavior-based inverse kinematics algorithm to predict arm prehension postures for computer-aided ergonomic evaluation," *Journal of Biomechanics*, v 32 n 5 1999, pp. 453-460.

Zhang, X., and Chaffin, D. B., 1996, Task effects on three-dimensional dynamic postures during seated reaching movements: an analysis method and illustration, *Proceedings of the 40th Annual Meeting of the Human Factors and Ergonomics Society*. 1(1), Philadelphia, PA, pp. 594-598.